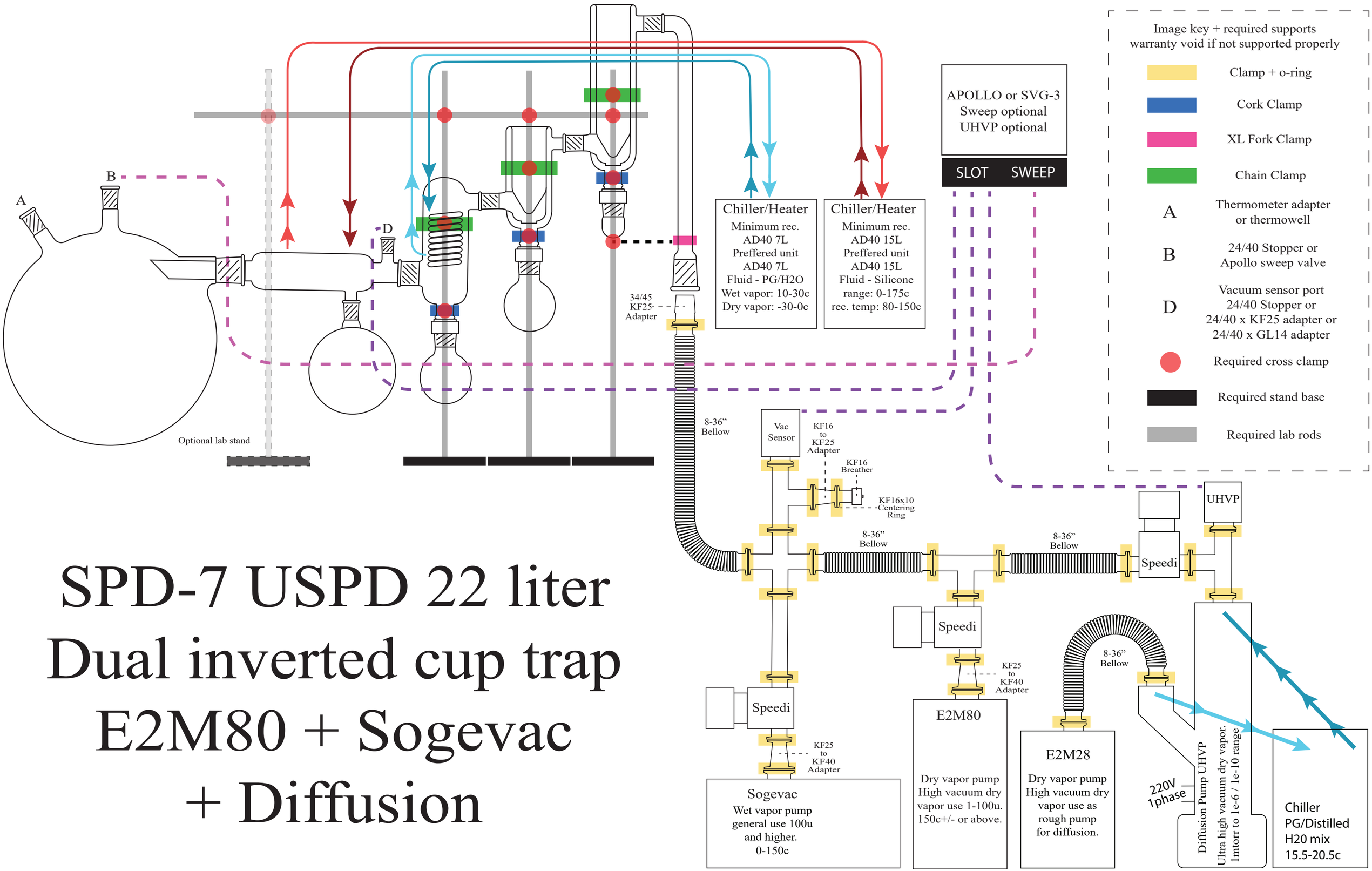SPD-7 USPD 22 liter Dual inverted cup trap E2M80 + Sogevac + Diffusion