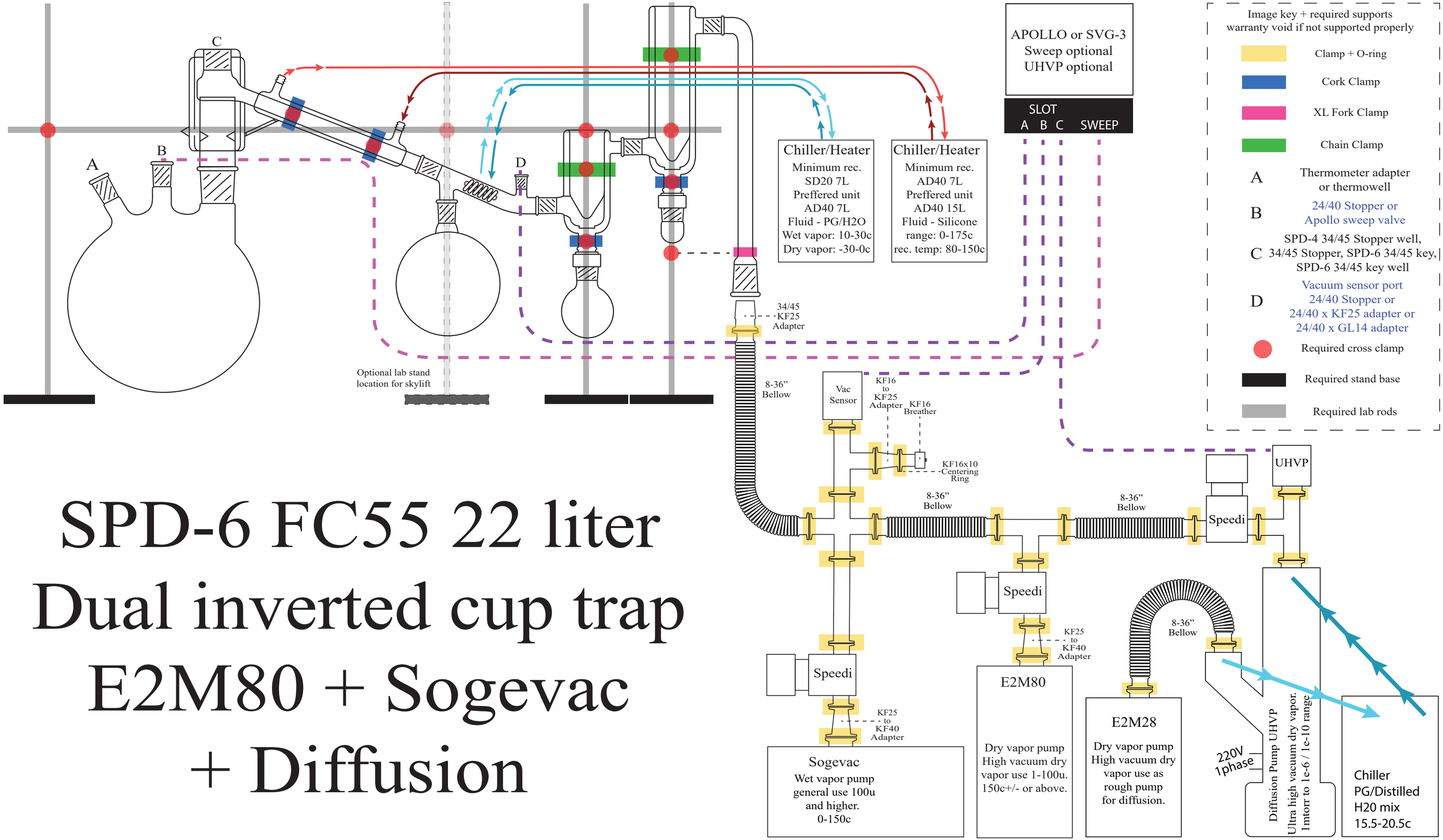SPD-6 FC55 22 liter Dual inverted cup trap E2M80 + Sogevac + Diffusion